SL50-G/F2-1/U30/C50

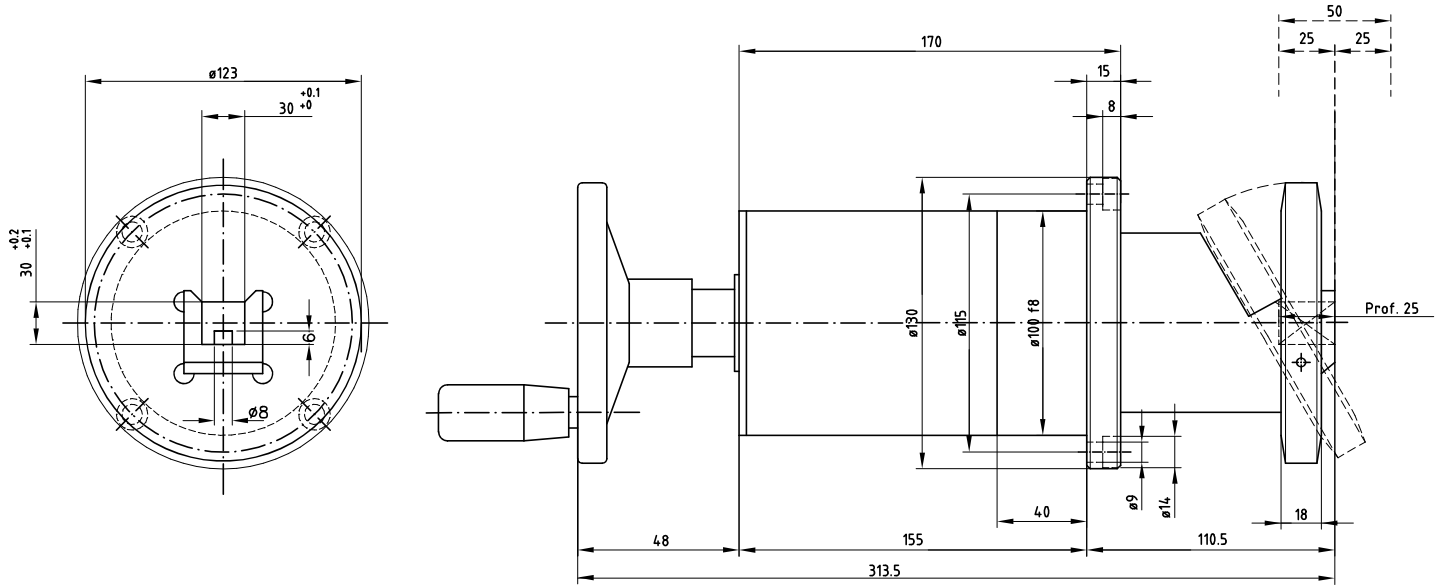

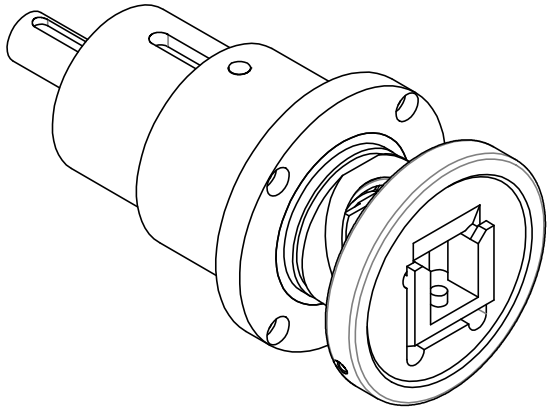

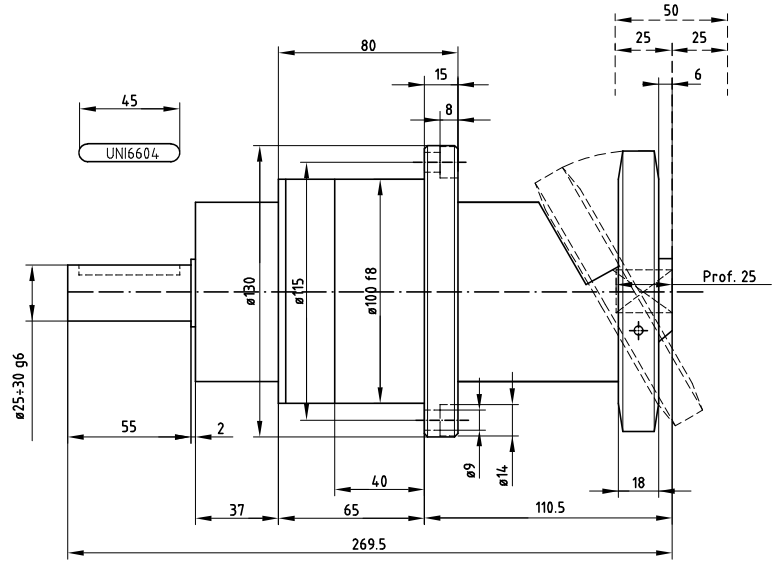

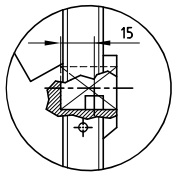

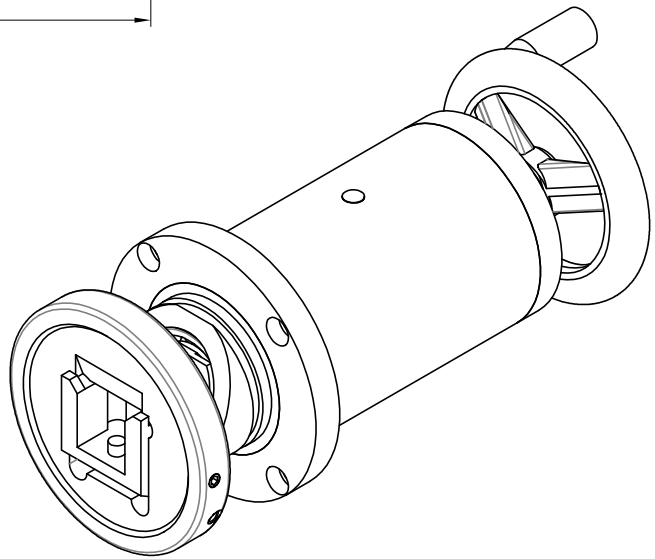

Peso Max. Bobina (Max. Roll Weight):	*6000 N*
Velocità Max. (Max. Speed):	*300 RPM*
Coppia Torc. Max. (Max. Torque):	*235 Nm*

GÉRO